Image Fusion Algorithm Based on Pulse Coupled Neural Network

Yamei Zhang

Xi'an Peihua Universty, Xi'an 710125, China

312413420@qq.com

Keywords: Pulse Coupled Neural Network; Image fusion; neuron; Image spatial frequency.

Abstract. This paper improves and simplifies the existing image fusion model. An image fusion algorithm based on pulse-coupled neural network is proposed. The multi-channel PCNN is used to fuse multi-focus images. The MSF is used as the input of PCNN and the link is EOL. Coefficients, and the fusion results are compared with traditional algorithms such as dwt, and simulation experiments are carried out. The visual effects and performance indicators reflect the superiority of the algorithm.

Introduction

Pulse Coupled Neural Network (PCNN), an artificial neural network originally discovered and proposed by Eckhorn et al. in the 1990s, has evolved into a PCNN model. The model is built on the cat's visual principle and belongs to a kind of artificial neural network. The network model can extract the useful information that people need from different backgrounds. In addition, the model also has pulse modulation and coupled links. The characteristics, which have unique advantages in image processing, are now widely used in the field of image fusion .This paper mainly improves and simplifies the existing model, introduces the main steps of the algorithm in detail, and proves the effectiveness of the algorithm through experiments.

PNCC Basic Model

The pulse-coupled neural network has a plurality of interconnected neurons, which constitute a feedback network, which has the characteristics of dynamic pulse release, vibration and fluctuation caused by synchronous pulse distribution , and its main components are shown in Figure 1.

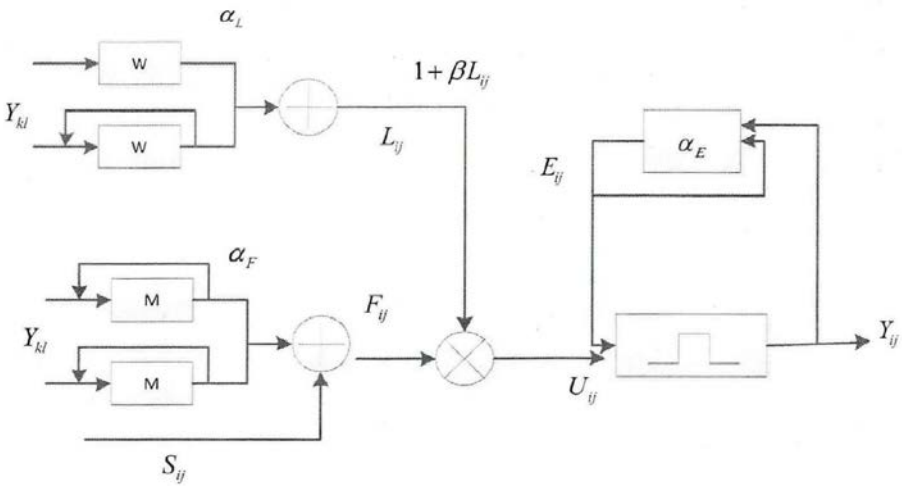

Branch tree Modulation coupling part Pulse generator

Figure 1 PCNN neuron model

From the model diagram in the above figure, we can see that the branch tree is the first part of the model, which mainly includes the link input channel L_{ij} (n) and the feedback channel F_{ij} (n), which are the two channels. Information Y_{ki} and external stimulus L_{ij} (n) are received from the adjacent neurons, respectively. In addition, S_{ij} only receives the incoming information of the

  DOI: 10.25236/ciais.2019.030

adjacent domain neurons. The second part is the modulation coupling part, or internal activity term, expressed by U_{ij}, by comparing U_{ij} its dynamic threshold E_{ij} (threshold) to determine whether the neuron can generate pulses, if The U_{ij} value is larger than the E_{ij} value, then the pulser generates a pulse, at which time Y_{ij} is 1, otherwise, Y_{ij} is 0, and the pulser is turned off. The mathematical model expression for PCNN is:

$$F_{ij}(n) = e^{-\alpha_F} F_{ij}(n-1) + V_F \sum_{kl} M_{ijKL}\, Y_{kl}(n-1) + F_{ij} \tag{1}$$

$$L_{ij}(n) = e^{-\alpha_L} F_{ij}(n-1) + V_L \sum_{kd} W_{ijKL}\, Y_{kl}(n-1) \tag{2}$$

$$U_{ij}(n) = F_y(n)\left(1 + \beta L_y(n)\right) \tag{3}$$

$$Y_{ij}(n) = \begin{cases} 1, U_{ij}(n) > E_{ij}(n-1) \\ 0, other \end{cases} \tag{4}$$

$$E_{ij}(n) = e^{-\alpha_E} E_{ij}(n-1) + V_E Y_{ij}(n) \tag{5}$$

Where $F_{ij}(n)$ is the nth feedback input of the (i,j)th neuron; the external stimulus input signal is represented by S_{ij}; β is the coupled link coefficient; M_{ijkl} and W_{ijkl} is a weighting coefficient matrix; $L_{ij}(n)$ represents a linear input, $E_{ij}(n)$ is a dynamic threshold; $Y_{ij(}n)$ is a pulse output; V_f and V_e, V_l is an amplification factor and an attenuation coefficient in $F_{ij}(n)$, $L_{ij}(n)$, and $E_{ij}(n)$.

PNCC Working Principle

When the neuron has a pulse output, then $E_{ij}(n)$ will suddenly increase and exceed $U_{ij}(n)$, causing the neuron to have no pulse output. When there is no pulse output, it will cause E_{ij}. (n) begins to decay. When the $E_{ij}(n)$ value decays below $U_{ij}(n)$, the pulse will be regenerated and cycled back and forth. In practical applications, PCNN can be divided into two mechanisms: uncoupled connection and coupled connection.

No Coupling Link. In the absence of a coupled link, β = 0, V_f = 0 in $F_{ij}(n)$, and each neuron is also shipped separately. The model at this point can be simplified as:

$$F_{ij}(n) = e^{-\alpha_E} F_{ij}(n-1) + S_{ij} \tag{6}$$

$$U_{ij}(n) = F_{ij}(n) \tag{7}$$

$$Y_{ij}(n) = \begin{cases} 1, U_{ij}(n) > E_{ij}(n-1) \\ 0, other \end{cases} \tag{8}$$

$$E_{ij}(n) = e^{-\alpha_E} E_{ij}(n-1) + V_E Y_{ij}(n) \tag{9}$$

Under normal circumstances, the given value of VE is generally large, and F_{ij}, E_{ij} are initially 0 in size, assuming that when N=0, the neurons j, i are ignited, at this time:

$$U_{ij}(0) = F_{ij}(0) = S_{ij} \tag{10}$$

$$Y_{ij}(0) = 1, S_{ij} > 0 \tag{11}$$

Bring the 11 style to the person (9)

$$E_{ij}(0) = V_E \tag{12}$$

Since the neuron $E_{ij}(0)$=0 suddenly rises to V_e >> S_{ij}, it cannot be ignited immediately and a pulse is generated. At this time, Y=0, E_{ij} is again from n=1. , 2, ... began to decay sequentially, namely:

$$U_{ij}(1) = F_{ij}(1) = e^{-\alpha_F} F_{ij}(0) + S_{ij} = e^{-\alpha_F} S_{ij} + S_{ij} = V_E \tag{13}$$

because:

$$Y_{ij}(0) = 1 \tag{14}$$

When there is excitation\but no coupling, the threshold of the neuron rises and does not ignite immediately.

$$E_{ij}(1) = e^{-\alpha_E} E_{ij}(0) + V_E Y_{ij}(1) = V_E e^{-\alpha_E} \tag{15}$$

Thereafter E_{ij} will decay again until the time at which n_2 satisfies U_{ij} greater than E_{ij} produces a third ignition. Such neurons will periodically generate pulses. It can be seen from the above equation that the magnitude of the gray value can determine the level of the fire frequency without being disturbed by other neurons. It can also be said that neurons with approximate gray values can be ignited together at the same time, which is the characteristic of the synchronous issuance pulse that PCNN has.

Coupling Link. When $\beta \neq 0$, there is a coupling link in the model at this time, and F_{ij} can be modulated by the coupling L_{ij}, which is the key to communication between neurons, such as the presence of neuron s_{ij} and kl, and exists. Coupling relationship, first define it as follows:

$$S_{ij} > S_{id} \tag{16}$$

Assume that at t=0, both neurons ignite simultaneously. Since $S_{ij}>S_{jd}$, ij ignites before kl and generates a pulse, but at this time, because of the coupling characteristic of U_{kd}, U_{kl} also grows larger in advance, when its value When it is increased beyond E_{ij}, the neuron kl is affected by ij and pre-ignited. It can be concluded that if the neuron kl is excitedly excited under the influence of ij, as long as the gray value S of kl is satisfied$_{ij}$ can satisfy the above capture range, and the same is true if there are more coupled neurons. Therefore, in the PCNN model, when the space or gray scale of the neurons is approximated, the burst phenomenon occurs synchronously. In order to synchronize more neurons, the link coefficient is β and the value of the coupled link domain L should be appropriately large. Therefore, when there is a coupled link in the PCNN, the model will issue a cluster burst sequence synchronously, further generating a synchronous burst phenomenon.

In the PCNN model, there are many parameters, and the values of different parameters will have a certain impact on the image processing results. Therefore, setting the parameters of the PCNN model is also a key step in the fusion processing.

Image Fusion Based on Improved PCNN Model

In the PCNN model, the number of neurons is the number of pixels in the input image and corresponds to it. In the PCNN model, the transmission information of a single neuron is generally: assuming that there are adjacent neurons j_1 and j_2, after the excitation of the neuron j_2, j_2 will also be advanced. I am excited to ignite. When the magnitudes of the external excitations of j_2 and j_2 are very close, j_2 will immediately ignite. If the characteristics of j_1 and j_2 are relatively large, the information transmitted by j_2 will be attenuated, and the ignition of neuron j_2 will be delayed. When j_2 is ignited, the information received by j2 is only part of the information passed by j2.As the number of iterations increases, the size of the external stimulus will also make the number of firings different, and the gap will continue to grow. By calculating the total number of firings of the pixel points at the same position of the source images A and B, and then comparing them, selecting the pixel points with a larger number of firings, as the pixel value of the final fusion result, the final fusion is obtained. image.

The traditional PCNN method has a lot of calculations in the process of fusion processing, which leads to low fusion efficiency. Therefore, a two-channel PCNN model is proposed, and the original two-channel model is improved and simplified. An improved dual-channel PCNN model is proposed. Its specific expression is as follows:

$$C_{ij}^1(n) = S_{ij}^1 \tag{17}$$

$$C_{ij}^2(n) = S_{ij}^2 \tag{18}$$

$$U_{ij}\ (\mathrm{n}) = e^{-\alpha_F} U_{ij}\ (\mathrm{n}-1)\left(1+\beta_{ij}^{1} C_{ij}^{1}(n)\right)\left(1+\beta_{ij}^{1} C_{ij}^{1}(n)\right) \tag{19}$$

$$\mathrm{Y}_{ij}\ (\mathrm{n}) = \begin{cases} 1, U_{ij}\ (\mathrm{n}) > E_{ij}\ (\mathrm{n}-1) \\ 0, other \end{cases} \tag{20}$$

$$E_{ij}\ (\mathrm{n}) = e^{-\alpha_E} E_{ij}\ (\mathrm{n}-1) + V_E V_{ij}\ (\mathrm{n}) \tag{21}$$

In the above formula,C_{ij}^{1}withC_{ij}^{2}Indicates the external 1st and 2nd input channels,S_{ij}^{1}withS_{ij}^{2}For the external stimulus corresponding to the corresponding channel,β_{ij}^{1}withβ_{ij}^{2}The mat is the connection strength of the corresponding channel, and the remaining parameters are consistent with the original model parameters.

Selection of Link Strength of Neurons The final pulse excitation and modulation results are largely affected by the link coefficients, so in the PCNN image fusion rules, the link strength value is a relatively important link. The selection of the link coefficient is a difficult point for PCNN application. The pixel's Energy of Lapacian (EOL) can be used to determine the clarity of the image to a certain extent. The larger the value of EOL, the higher the image clarity. Therefore, EOL is used as the link coefficient of PCNN in this paper.

PCNN Input Selection. The spatial frequency (SF) is an image feature related to image gradient values. The larger the value, the clearer the resulting image. In general, SF can only calculate row frequency and column frequency information. Regarding the selection of PCNN inputs, this paper uses the improved spatial frequency (MSF) as an input in the model. Compared to SF, MSF also adds gradient energy in two diagonal directions. The improved MSF is defined as follows:

$$\mathrm{MSF} = \frac{1}{MN}\sum_{i=1}^{M}\sum_{j=1}^{N}(\mathrm{RF}+\mathrm{CF}+\mathrm{MDF}) \tag{22}$$

Fusion Steps. The implementation steps of the improved image fusion algorithm based on two-channel PCNN are as follows:

(1) The source images a and b with fusion are first input into the PCNN model, and pulses are generated by exciting the neurons.

(2) Calculate the number of ignitions at the pixel (u) in a and b, respectively, to obtain an ignition map.

(3) By comparing the local area ignition maps of the corresponding pixel points of a and b, the decision map is determined, and the coefficient is selected.

(4) Reconstruct the final result image using the selected coefficients.

Analysis of Experimental Results

The algorithm is validated by experiments. The parameters of PCNN are set as: α_l=0.734, α_e=0.21, V_l=1.01, V_e=20, N=200.W indicates the magnitude of the central neuron affected by peripheral neurons, and the value is [0.7, 1, 0.7; 1, 0, 1; 0.7, 1, 0.7].

The computer simulation configuration is: Inter Core I 5, 2.6GHz, eight-core processor. Simulation experiments were performed by MATLAB2016.In order to objectively evaluate the fusion effect, the fusion results were analyzed using IE, MI, STD, and AG indicators. The fusion results are shown in Figure 2.(a) and (b) are the left and right focus images to be fused, respectively, and (c) is the fused image of the discrete wavelet transform (DTW) method, which uses "db4" as the wavelet base and decomposes the number of layers. It is 3 layers, and (d) is the fusion image of the algorithm in this paper.

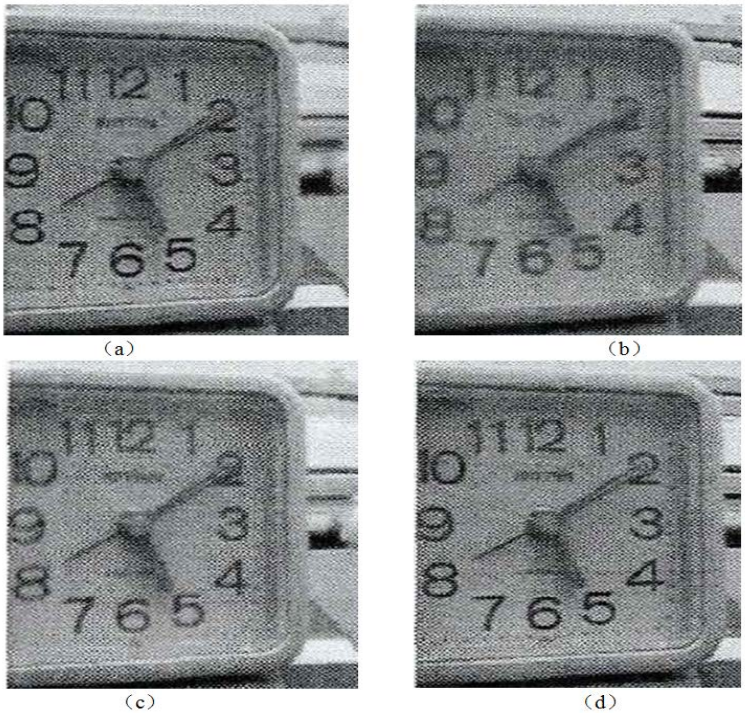

Figure 2 Original image and fusion results

From the fusion effect diagram shown in Figure 2, we can see that the fusion result of Figure (c) is also less ideal in the digital part of the right half. In the figure, the overall fusion effect is OK, but part the level of detail is still to be improved. The fusion effect in Figure (d) is clearer on the left and right focus parts, and the fusion result is better.

Table 1 shows the performance indicators of the two sets of fused images, which are objectively evaluated from four indicators: ie, ag, std, and mi.

Table 1 Objective performance indicators of image fusion

	parameter	**IE**	**AG**	**STD**	**MI**
Algorithm name	DWT	7.286	5.873	46.450	6.150
	Algorithm	7.304	6.0496	46.902	7.173

From the above Table 1, it can be seen that the algorithm adopted in this paper has better indicators in terms of ie, ag, std and mi, and the quality of fusion is higher.

Summary

In this chapter, we use PCNN model to analyze the working mode of PCNN, and improve its model. We use multi-channel PCNN to fuse multi-focus image, use MSF as input of PCNN, use EOL as the link coefficient, and merge the result. Compared with dwt, lp, traditional PCNN and other algorithms, whether it is from the visual effect of subjective evaluation or the performance index of objective evaluation, it shows the superiority of this algorithm.

References

[1] Lin Wei. Application of Waveform Clustering Method Based on Deep Learning in Reservoir Prediction[a]. Proceedings of Geophysical Technology Symposium of 2019 of China Petroleum Institute [c]. 2019:4.

[2] Ah.S. Khalil,A.S. Smolyanichenko,E.V. Vilson,E.E. Shchutskaya,E.G. Tsurikova,Ah.S. Khalil. Modeling of Ammonium and COD Adsorption in Aqueous Solutions Using an Artificial Neural Network[P]. Proceedings of the International Symposium "Engineering and Earth Sciences: Applied and Fundamental Research" dedicated to the 85th anniversary of H.I. Ibragimov (ISEES 2019),2019.

[3] Anna Shokhnekh,Nikolai Lomakin,Alexandra Glushchenko,Oksana Kovalenko,Ekaterina Kosobokova,Sergey Sazonov. Digital neural network for managing financial risk in business due to real options in the financial and economic system[P]. Proceedings of the International Scientific-Practical Conference “Business Cooperation as a Resource of Sustainable Economic Development and Investment Attraction” (ISPCBC 2019),2019.

[4] Zhang Xianhong, Zhang Chunrui. An improved method for edge extraction of cellular neural network images[j]. Journal of Jinan University(Natural Science and Medicine), 2017, 38(02): 178-184.

[5] Boxiang Hou,Guohui Tian,Bin Huang. Skeleton based action recognition using pose change map and convolutional neural networks[P]. International Conference on Digital Image Processing,2019.

[6] Zeng Xueqin. Research on depth image edge detection based on improved genetic neural network [d]. Harbin University of Science and Technology, 2011.

[7] Yang Ting. Color image edge extraction based on memristive cell neural network [d]. Southwest University, 2017.

[8] Lv Xiaolong. Research on image edge detection algorithm based on pulse coupled neural network[d]. Harbin Institute of Technology, 2016.

[9] Lang Jun, Bai Guozhen, Zhou Yuan. Research on image edge extraction based on improved lvq neural network [j]. Electronic Technology, 2018, 31 (06): 70-74.

[10] Wei Hongchun. Image edge segmentation based on improved neural network [j]. Modern Electronic Technology, 2018, 41 (16): 112-115.